Introduction of Servo Direct Drive Electric Screw Press

Author: Mr. Hebin Auditor: Mr. Larry Liu 2018-06-07

Characteristics and Development Trend of Screw Press

Screw press is a kind of constant energy forging equipment. Classification by driver type, at present, there are three types screw press in domestic: friction press (the first generation), clutch type (high energy) screw press and electric screw press (the second generation). Friction press is a screw press whose motor changes the direction of flywheel rotation through friction disc and control cylinder; clutch screw press is a screw press whose motor changes the direction of flywheel rotation through clutch and return cylinder; electric screw press is a screw press whose motor changes the direction of flywheel rotation through gear transmission or belt transmission.

The screw press has a special force-energy relationship, and there is a problem of excess energy. That is, when the effective energy provided by the flywheel is larger than the deformation energy actually needed by forgings, this part of energy will be transformed into machine load, which will aggravate the wear and tear of the machine and shorten the life of the main stressed parts, and will cause equipment damage in serious condition.

At present, there are two main schemes for domestic electric screw press: switched reluctance motor drive and AC asynchronous motor variable frequency drive system. Because of the inherent defects of these two motors and driving modes, although the electric screw press has made great progress in improving performance and reliability, it is far from the requirements of high flexibility, high precision and high reliability of users.

Servo direct drive screw press is the latest development of forming equipment, known as the "third generation screw press".

With the growing maturity of medium and high power (over 100KW) AC servo motors and their drive and control devices, Japanese famous pressure machine manufacturers such as AIDA, KOMASTU, ENOMOTO and German SCHULER, SMS and other companies have launched commercialized products. At present, it is widely used in sheet metal stamping, and it is also widely promoted in the field of precision die forging. The forming equipment has the characteristics of flexibility and intelligence, and its working performance and process adaptability are greatly improved. In the field of die forging, the servo direct drive screw press overcomes the fault factors of the original transmission link of the screw press, guarantees the reliability and stability of the equipment, and has epoch-making significance because of its characteristics of zero transmission and zero maintenance.

Driving Mode of Electric Screw Press

There have been many forms of electric screw press according to the characteristics of motor drive, but there are two main types of industrial applications: direct transmission mode and mechanical transmission mode.

1. Direct transmission mode of motor

In the form of direct transmission, the rotor of the motor is connected with the screw shaft. A special low-speed and high-torque motor is installed directly on the top of the main engine. The rotor of the motor is a part of the flywheel of the screw press (as shown in Figure 1). For example, the PA/PAR and PSM/PSH series of SCHULER company in Germany and the SPR/SPP series of electric screw press of LASCO company all adopt motor direct transmission mode, as shown in Figures 2 and 3. The characteristic of this scheme is that it uses low-speed and high-torque motor with few transmission links.

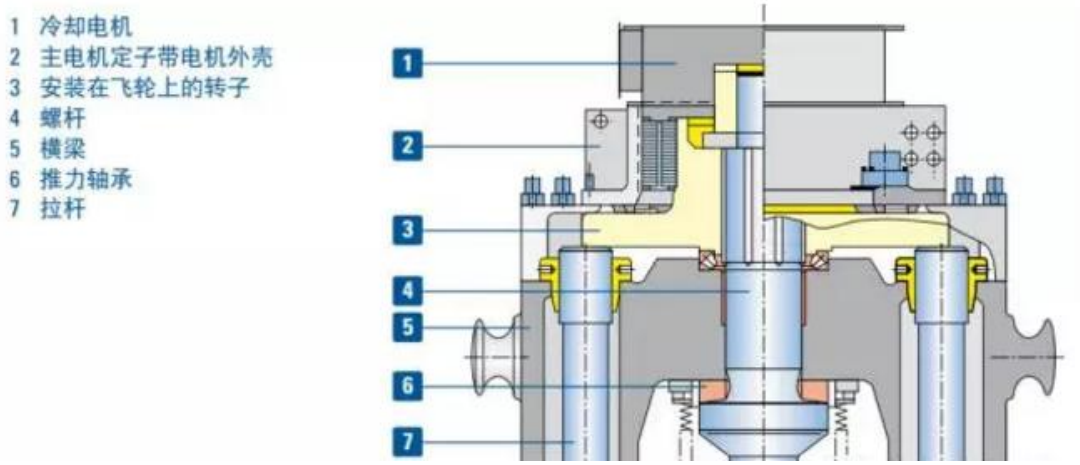

Figure1 Schematic diagram of direct motor drive of SCHULER Company





Figure2 SCHULER Direct Drive Products Figure3 Lasco Direct Drive Products

2. Mechanical transmission mode of motor

Multiple motors are driven by gears or belts to drive the screw. SCHULER PZS series (as shown in Figure 4), Lasco gear transmission (as shown in Figure 5) ENOMOTO belt transmission (as shown in Figure 6) electric screw press adopts this scheme. The characteristic of this scheme is that the motor speed is higher and the torque is smaller.



Figure4 SCHULER Gear transmission

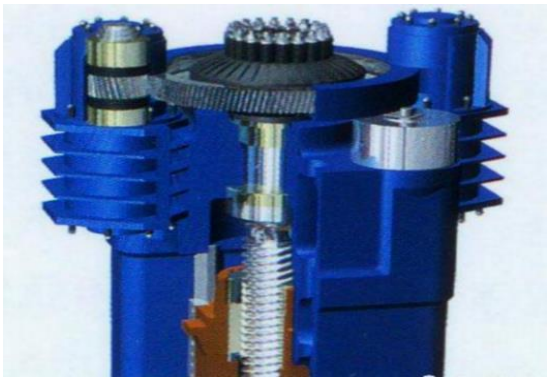

Figure5 LASCO Gear transmission

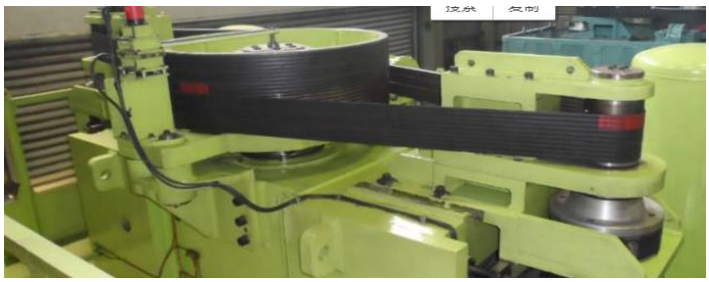

Figure 6. Schematic diagram of ENOMOTO belt drive

SCHULER adopts direct drive mode under nominal pressure 4000 tons (long-term allowable pressure 6300 tons) and gear drive mode above nominal pressure 5000 tons (long-term allowable pressure 8000 tons).

At present, most domestic electric screw presses adopt the mechanical transmission mode of gears or combined triangular belt. When the contact forging strikes, the maximum speed of the motor reaches the rated speed, and the downward speed of the slider is about 700 mm/s. as the running of motor suddenly stops, the equipment faces huge impact and inertia energy release. How to choose the motor type with small inertia, how to release its own energy and how to protect the transmission mechanism such as the motor shaft and the base, these become the most important factors which must be considered for the press to work steadily for a long time. The domestic manufacturers currently adopt combined triangular belt, steel gear and bakelite composite gear transmission with their own characteristics (see Table 1 for comparison), but they all have shortcomings.

Connected triangular belt with switched reluctance motor relies on the stretching or slipping of the belt to release the inertia of the motor. The transmission efficiency is not high and the service life is short, it is only suitable for small tonnage press. In the steel gear with switched reluctance motor mode, the gear and motor shaft are rigidly connected, and the inertia performance of the motor is released by the deformation of the motor shaft. The motor shaft should be strengthened, and the lubrication device must be needed, so the noise is high and the tooth surface of the flywheel is worn out greatly. In the mode of bakelite composite gear and AC asynchronous frequency conversion motor, the pinion is made of macromolecule material, and the pinion is connected with the drive motor shaft by friction, and the energy is unloaded by friction skidding device. Because of the large inertia of asynchronous motor, the inertia performance to be released is larger, so in the process of use, the friction disc will be seriously heated, resulting in bakelite gear heating carbonization, low life.

Table 1 Comparison of transmission modes

Transmission mode	Belt+Switched Reluctance Motor	Steel gear + Switched reluctance motor	Bakelite gear + Asynchronous variable frequency motor
Release energy mode	Expansion or slippage of a belt	Motor shaft deformation	Friction slippage
Efficiency	About 80% than gear drive.	High	High
Noise	Tiny	Big	Small
Lubrication	No need.	Need	No need.
Life	Average belt need be changed per year	Longer, damage to the tooth surface of the flywheel	Shorter, depend on the life of bakelite gear

Driving Motor of Electric Screw Press

Motor is the core component of screw press, which is in frequent positive and negative rotation. The frequency of rotation reversal is sometimes more than 30 times per minute, and it bears severe impact and vibration load. In particular, the motor is required to have high protection level, high rotor strength, small inertia, withstand the instantaneous impact of more than three times the rated torque, long-term operation without heating and other characteristics. In addition, due to the large inertia of flywheel and slider, and the limited travel of slider, it requires the motor to have large starting torque, good acceleration performance, and small starting current, so as to avoid the impact on the power grid.

At present, the domestic electric screw press mainly adopts switched reluctance motor and AC asynchronous frequency conversion motor.

1. Switched Reluctance Motor

Switched reluctance motor (SRM) is a doubly salient variable reluctance motor. The salient poles of its stator and rotor are made of common silicon steel sheets. The rotor has neither winding nor permanent magnet, and the stator pole is winded with concentrated winding.

The advantages are small starting current, small inertia of the rotor and stay cool.

The disadvantage is that there are a few slots in the stator and rotor of the motor. When the motor rotates, the slot effect is obvious, the vibration and noise of the motor are higher, the torque ripple at low speed is bigger, and the power density of the motor is lower than that of the traditional asynchronous motor and that of the permanent magnet motor. In addition, it is difficult to achieve servo level, which limits its application in high-precision occasions.

2. AC Asynchronous Frequency Conversion Motor

AC asynchronous variable frequency motor is an improvement of squirrel cage induction asynchronous motor which is widely used in China today. In order to adapt to the working condition of screw press, the strength of base, protection level, ventilation and heat dissipation are improved. The structure characteristics of stator and rotor are essentially the same as that of three-phase squirrel cage induction motor.

The stator is equipped with symmetrical three-phase windings, while the cylindrical rotor is made of casting aluminum, and electromagnetic torque is generated by electromagnetic induction.

The advantages are that AC asynchronous motors are widely used in China and easy to maintain.

The disadvantage is that the starting current is large, the inertia of the rotor is high. In the case of frequent positive and negative rotation, it is easy to heat up, which will lead to insulation damage and motor failure in the long-term use process.

In summary, the speed and the strike energy cann't easy to control accurately and the fluctuation is large by using the drive mode of switched reluctance motor plus controller. The asynchronous motor plus frequency converter drive mode has large torque of inertia and heave impact load for the transmission system with frequent sudden stops, which makes the life of pinion gear, the weakest link in the transmission system, low.

Therefore, in the application of electric screw press for more than ten years, insufficient stability and reliability of equipment are the most criticized problems of users.

Application of AC permanent magnet synchronous servo direct drive motor in J58S-YT electric screw press

AC permanent magnet synchronous servo direct drive motor is a special servo motor with low speed, high torque and direct drive. It can provide the highest torque density and performance to date. The motor consists of stators with many series, permanent magnet hollow shaft rotors and high precision encoders. The structure is designed with narrow stack of iron chips and large hollow shafts. Since the load is directly connected to the rotor of the motor without the need for transfer devices (such as reducer, belt pulley, chain, etc.), it is referred to as direct drive motor (as shown in Fig. 7). With its advantages of high power factor and high ratio of torque to current, it has been widely used in CNC systems, robots and other fields.

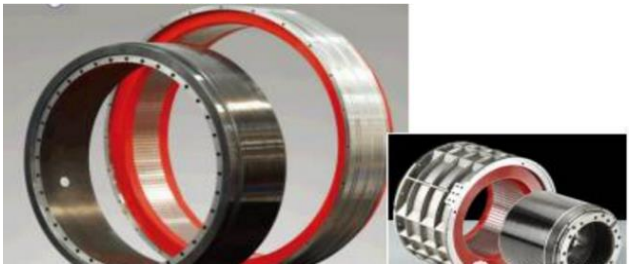

Figure 7 AC synchronous servo direct drive motor

Generally, direct drive motors have the following characteristics:

- ✧ Simple structure and reliable operation;
- ✧ With high performance Nd-Fe-B excitation, the loss of iron and copper is less than that of low-power asynchronous motors.
- ✧ The size of the motor is smaller than that of the asynchronous motor, and the power factor is much higher than that of the asynchronous motor.
- ✧ Direct coupling with load, low speed and high torque, reduce the maintenance workload of mechanical transmission;
- ✧ A rugged rotary encoder is used as a speed feedback unit to adapt to long-term use in large vibration situations.

DDR permanent magnet synchronous servo linear motor (as shown in figure 8) has been developed by our company and well-known domestic motor enterprises. It has been successfully applied in J58S-YT series electric screw press. The motor has the following characteristics:

1. The structure of the motor is optimized by using advanced FEA technology. The fluctuation of electromagnetic thrust is less than 3% of the total thrust.

2. The unique winding and magnetic circuit design improves the power density of the motor, reduces the volume of the motor, and increases the design flexibility of the motor users.

3. The application of water cooling technology, combined with constant temperature cooling system, makes the temperature of the process system constant, reduces the adverse effects such as deformation and stress caused by temperature change of each structure, and lays a foundation for the application of permanent magnet synchronous servo linear motor.

4. The application of vacuum glue filling technology can improve the thermal conductivity of the motor by 45% and the insulation level by one grade.

5. The motor performance test system is designed and developed independently, which ensures the quality and stability of the product.



Figure 8 DDR permanent magnet synchronous linear motor for J58S-YT series servo direct drive electric screw press

Following is a comprehensive comparison of the application of switched reluctance motor, AC asynchronous variable frequency motor and AC permanent magnet synchronous direct drive servo motor in screw press by tabular comparison .

Table 2: Performance comparison of three type of motors

Motor	Switched Reluctance Motor	AC Asynchronous Frequency Conversion Motor	AC Permanent Magnet Synchronous Direct Drive Servo Motor
Stator and rotor structure	The doubly salient structure with silicon steel sheet laminated, rotor has no winding and no permanent magnet, and stator has concentrated winding.	The stator has three-phase windings, the rotor is a squirrel-cage structure of cast aluminium, with inductive current passing through it	The stator has three-phase windings; the rotor is a permanent magnet
Control mode of drive system	Switch control	Open-loop control of direct torque without displacement	Vector Ring Control with Displacement Encoder
Starting Current and Overload Capability	When the starting current is 30% of the rated current carrying capacity, the starting torque can reach 250% of the rated torque.	The starting torque is small and the starting current is large. 200% rated current can reach 100% torque	Constant rotating torque regulates speed, and the maximum torque is 2-3 times the rated torque.
The Heating Conditions of Motor in Long-term Running	Rotor inertia weight is small, no current, does not heat up after long-term positive and negative	The inertia weight of rotor is large, inductive current pass, the motor heat up after long-term running.	Rotor without current, no heat up after long-term positive and negative inversion
Positioning accuracy and servo	Torque ripple is large and speed regulation servo is poor.	Small torque ripple and high positioning accuracy	Small torque ripple, accurate positioning, up to 0.005 mm
Transmission Mode	Belt or gear secondary transmission	Gear secondary transmission	Zero transmission, Direct Drive

It can be seen from the table that the servo screw press using AC permanent magnet synchronous servo direct drive motor will bring revolutionary changes in high precision, high flexibility, energy saving and reliability.

Brief introduction of J58S-YT servo direct drive electric screw press

1. Structure sketch of J58S-YT servo direct drive electric screw press

The AC synchronous servo direct drive motor is used to transfer the torque directly to the screw without intermediate transmission parts and energy loss. From the aspects of the firmness, reliability, maintenance and efficiency of the equipment, this direct drive device represents the best scheme for the drive design of screw press.

J58S-YT servo direct drive screw press adopts synchronous servo direct drive motor + servo controller drive, PLC + touch screen control mode, as shown in Figure 8. The synchronous servo direct drive motor drives the screw directly, and the thrust bearing is installed in the middle of the screw to transfer the axial force to the fuselage. The screw and the screw thread cooperate to convert the screw's rotation motion into the reciprocating linear motion between the nut and the slider, and transfer the energy and force. The brake is installed on the upper part of the big gear, and the brake block is pressed down by the spring force to prevent the big gear from abnormal rotation. The synchronous servo motor has a rotary encoder to detect the position and speed of the rotor, and is used to detect the displacement of the slider in real time.

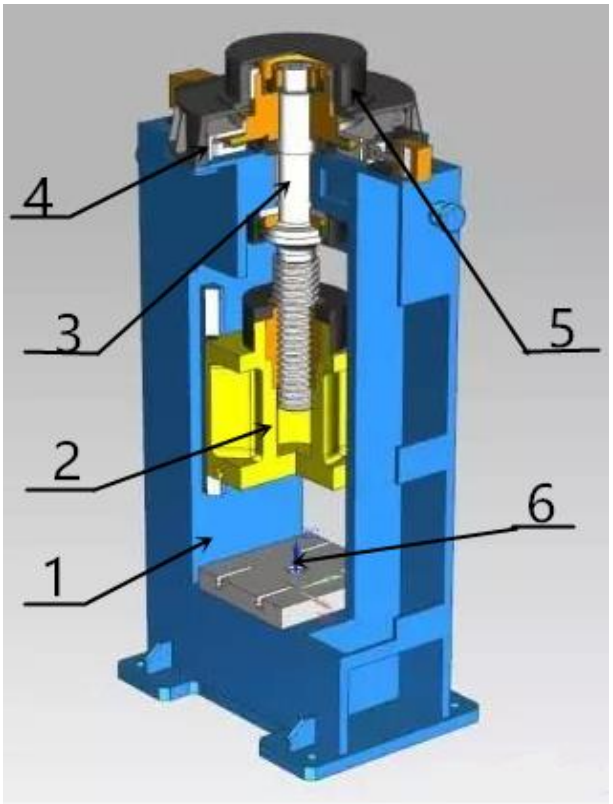

Fig. 8 Structure sketch of servo screw press

1 Body 2 Slider and nut 3 Screw and flywheel 4 Brake
5 Synchronous servo direct drive motor 6 Ejection mechanism



Figure 9 SSET First Generation and Second Generation Servo Direct Drive Screw Press

2. Introduction of J58S-YT servo direct drive electric screw press



Fig. 10 J58S-YT servo direct drive electric screw press

1. Basic structure

The basic structure of J58YT series CNC electric screw press consists of body, slider, flywheel, motor, brake, ejector mechanism, lubrication and digital control system (see Figure 8). The basic structure of each part is briefly introduced as follows:

- ✧ Body: the body of 2500 tons press or more is a split structure, which is composed of steel castings of cross beams, base, left and right columns separately, and the pre-stressing combined body structure realized by pull rods and tension nuts. The body of press less than 2500 tons is an integral cast steel structure. The strength and stiffness of the body are simulated and calculated accurately by finite element method, and the structure is optimized.
- ✧ Slider system: this part is composed of slider and copper nut. The copper nut is centrifugally cast with ZCuZn25Al6Fe3Mn3 wear-resistant material. The insert of four corners of the slider and the "X" type guide rail inside the body are manually developed to effectively guarantee the guiding accuracy.
- ✧ Flywheel system: It is composed of main screw, thrust bearing and flywheel body. The main screw is made of 35CrMoV forging material, which is durable. The flywheel is mainly for energy storage.
- ✧ Motor part: The flywheel rotor of the permanent magnet synchronous servo linear motor includes the flywheel body, the magnet base plate and the magnetic conduction inner ring (permanent magnet). The magnetic conduction inner ring is fixed on the magnet base plate along the outer circumference of the flywheel body and is tightened by bolts. The stator assembly consists of eight stators and a stator seat for fixing the stator. The stator seat is fixed on the fixed plate of the motor on the top of the cross beam of the fuselage. The stator is set on the outer circumference side of the flywheel rotor. Each stator includes a stator core and a stator winding. The stator winding is arranged in the stator core.
- ✧ Brake system: It is composed of brake support, cylinder, brake spring and brake plate. When power is on, the brake is loosened. When the power is on, the brake is loosened, when the power is off, the brake is held tightly, and the safety performance is high. The working wind pressure is 0.4-0.6 MPa. It is mainly used to hold the brake slider when the power is suddenly off. The brake of permanent magnet synchronous servo linear motor depends on the electromagnetic brake of the motor itself.
- ✧ Ejector mechanism: The bottom knockout mechanism is composed of guide sleeve, ejector rod, hydraulic cylinder and hydraulic station. The ejecting force and the ejecting stroke can be determined according to the actual needs of users. The ejecting force is 10-20 tons and the stroke is less than 100 mm. In addition, according to the user's needs, the upper knockout mechanism can be arranged at the bottom of the slider, the force of this ejector is less than 10 tons, and the stroke is less than 30 mm.
- ✧ Lubrication system: consisting of lubrication station and pipeline, rolling bearing, upper guide sleeve, thrust bearing and thrust bearing seat are lubricated by oil pool type thin oil circulation; guide rail is lubricated by automatic intermittent thin oil lubrication, oil supply quantity and lubrication frequency can be set; main screw and copper nut are

lubricated by automatic intermittent grease lubrication. Lubrication system has lubrication fault alarm function.

✧ Safety protection of equipment: emergency buttons such as "stop" and "emergency stop" have been set up; travel brake device prevents slider from falling and ensures safety of die changing maintenance; travel limit protection switch is set at upper and lower limit positions of slider; four aluminum pillars are installed above the slider to absorb energy and prevent top rush.

2. Working principle

When the stator coil winding of permanent magnet synchronous servo linear motor is electrified, it generates electromagnetic force, which directly drives the flywheel equipped with permanent magnet. The force of the flywheel is balanced in the process of direct driving flywheel with eight stator coil windings, which can avoid the eccentric wear of the screw guide sleeve (copper sleeve). The motor drives the flywheel and screw to speed up rotation, and the screw rotating motion is transformed into the up and down reciprocating motion of the slider through the screw pair. After receiving the hit signal, the motor starts and drives the slider to accelerate downward. When the pre-set strike energy is detected, the kinetic energy stored by the flywheel is used to shape the part. After the flywheel releases the energy, the motor immediately reverses, driving the slider back to a certain height, and then enters the braking state, so that the slider returns to the pre-set stroke position. Because the slider is mainly braked by electromagnetic force of the motor when it returns, the mechanical brake only holds the slider when the power is suddenly cut off, so the brake material is not easy to wear.

3. Equipment characteristics

3.1 Direct drive motor is used instead of traditional motor to realize direct drive, and the traditional gear transmission system is cancelled. It has the following outstanding advantages:

☞ Drive stiffness and efficiency.
It avoids the motion lag caused by the elastic deformation, friction and wear of the intermediate transmission link and the reverse clearance, and improves its transmission stiffness. At the same time, it eliminates the energy loss during the mechanical wear of the intermediate transmission link, which is more energy-saving and greatly improves the transmission efficiency.

☞ High positioning accuracy.
The speed and position measured by the closed-loop system consisting of rotary encoders and screw drive directly by a motor are the actual speed and position, which can achieve higher accuracy.

☞ Low noise and zero maintenance.
Motion noise is greatly reduced; at the same time, only rotating or linear bearings are left for worn parts, so as to achieve permanent lubrication and one-time assembly, zero maintenance can be achieved.

3.2 The rotary encoder used for motor driving is connected to the PLC control system to control the movement of the slider, which has high control accuracy, good repeatability, accurate strike energy and small fluctuation.

3.3 Using PLC control and touch screen, we can choose the working mode and set parameters such as stroke and energy, and display parameters such as position, speed and energy in real time.

3.4 Optimize the lubrication system reasonably, integrate the three parts of lubrication, all of which are lubricated with dilute oil. It overcomes the problems of non-recycling, waste and dirty environment when automatic intermittent grease lubrication is used for lubrication of main screw and nut.

3.5 Guiding device: It is composed of the inner guide rail of the fuselage and the guide insert on the slider. In order to make the clearance of the guide rail basically unaffected under the condition of thermal expansion and cold contraction, the guide rail is distributed in an "X" shape.

In short, the servo direct drive screw press is directly connected to the screw load, eliminating the intermediate transmission components, overcoming the inherent defects of the traditional drive system, greatly improving the transmission efficiency of the system and improving the energy utilization rate. It provides excellent performance, high stiffness, high dynamic speed and acceleration, high position accuracy, higher production capacity, compact mechanical assembly, smooth, zero transmission maintenance and quiet operation.